DocuSign Envelope ID: 2281E614-630D-43BB-BE2D-5453D4ED2406

8/17/99

REVISIONS

PROJECT REFERENCE NO.	SHEET NO.
B-5763	4
R/W SHEET NO.	

ROADWAY DESIGN ENGINEER
NORTH CAROLINA PROFESSIONAL SEAL 32606 ENGINEER BENJAMIN R. CRAWFORD
3/30/2017
DocuSigned by: Benjamin R. Crawford

HYDRAULICS ENGINEER
NORTH CAROLINA PROFESSIONAL SEAL 29474 ENGINEER DAVID S. WEBB
3/30/2017
DocuSigned by: David S. Webb

DOCUMENT NOT CONSIDERED FINAL UNLESS ALL SIGNATURES COMPLETED

SEPI ENGINEERING & CONSTRUCTION
1025 Wade Avenue
Raleigh, NC 27605
Tel:919-789-9977
Fax:919-789-9591
License: C-2197

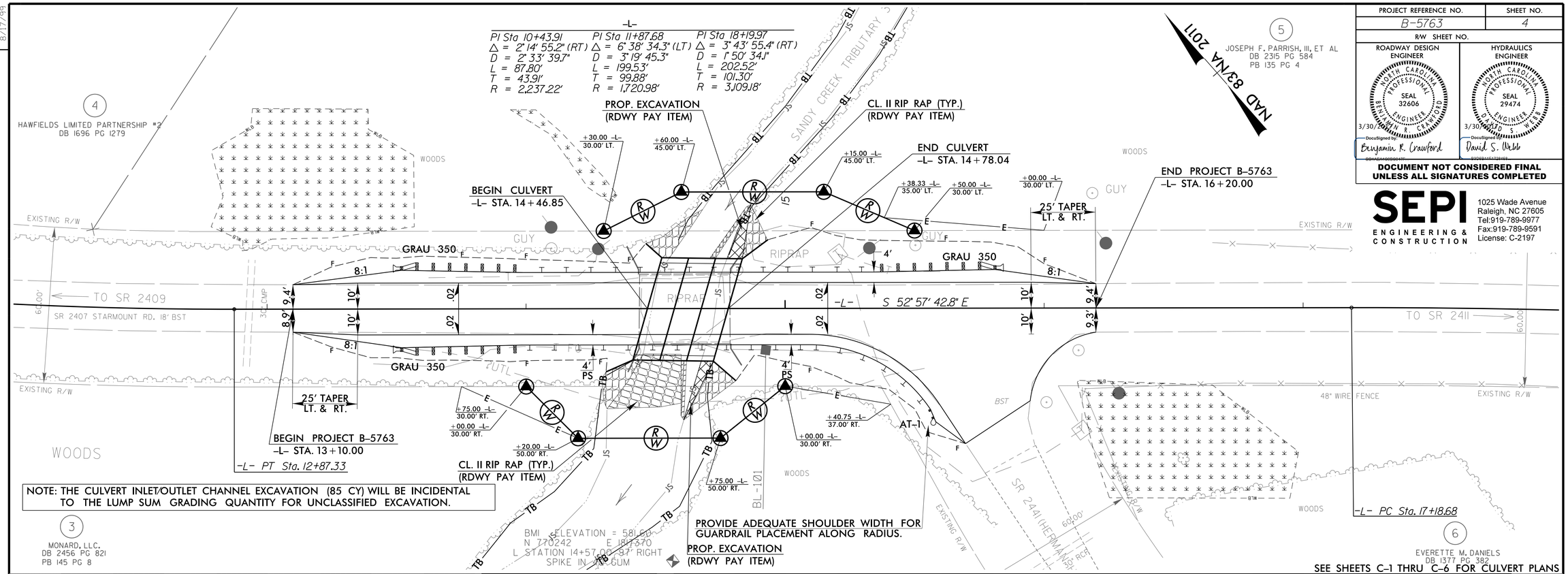

NOTE: THE CULVERT INLET/OUTLET CHANNEL EXCAVATION (85 CY) WILL BE INCIDENTAL TO THE LUMP SUM GRADING QUANTITY FOR UNCLASSIFIED EXCAVATION.

SEE SHEETS C-1 THRU C-6 FOR CULVERT PLANS

CULVERT HYDRAULIC DATA

DESIGN DISCHARGE	= 1800	CFS
DESIGN FREQUENCY	= 10	YRS
DESIGN HW ELEVATION	= 583.30	FT
BASE DISCHARGE	= 2500	CFS
BASE FREQUENCY	= 100	YRS
BASE HW ELEVATION	= 585.37	FT
OVERTOPPING DISCHARGE	= 1900	CFS
OVERTOPPING FREQUENCY	= 10+	YRS
OVERTOPPING ELEVATION	= 583.8	FT

INLET/OUTLET CHANNEL DETAIL

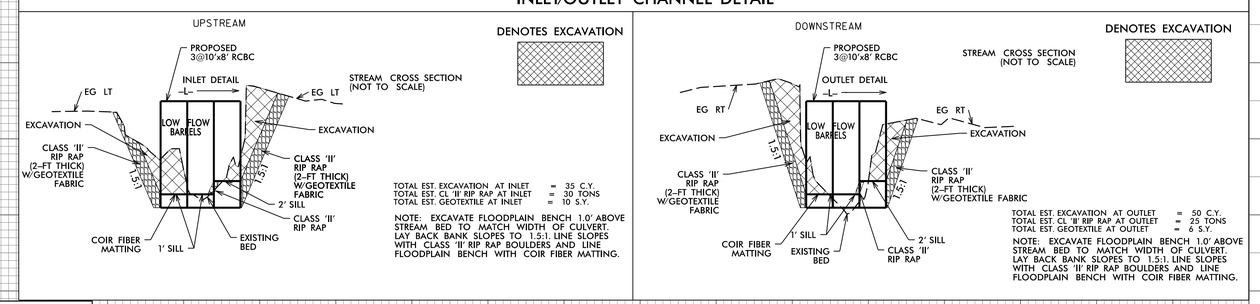

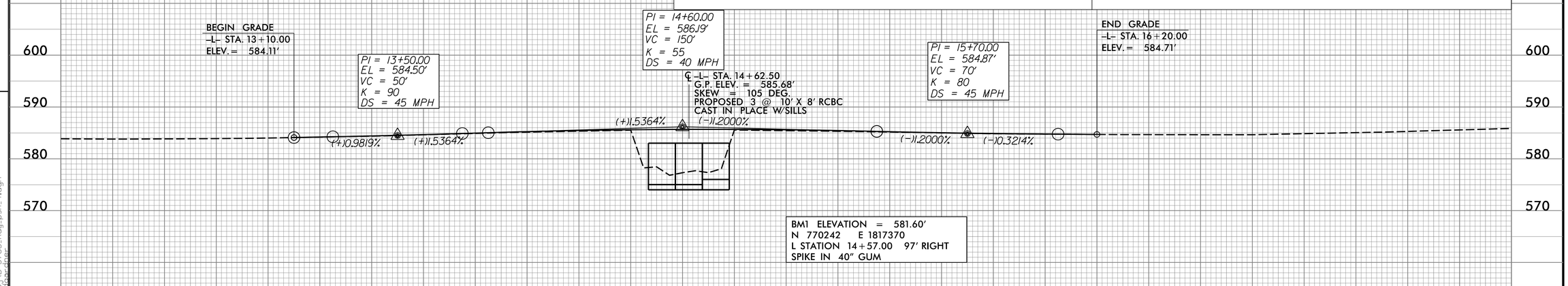

3/30/2017
(Proj) B-5763_Rdy_psh_4.dgn
ET_Rdwy_dgn